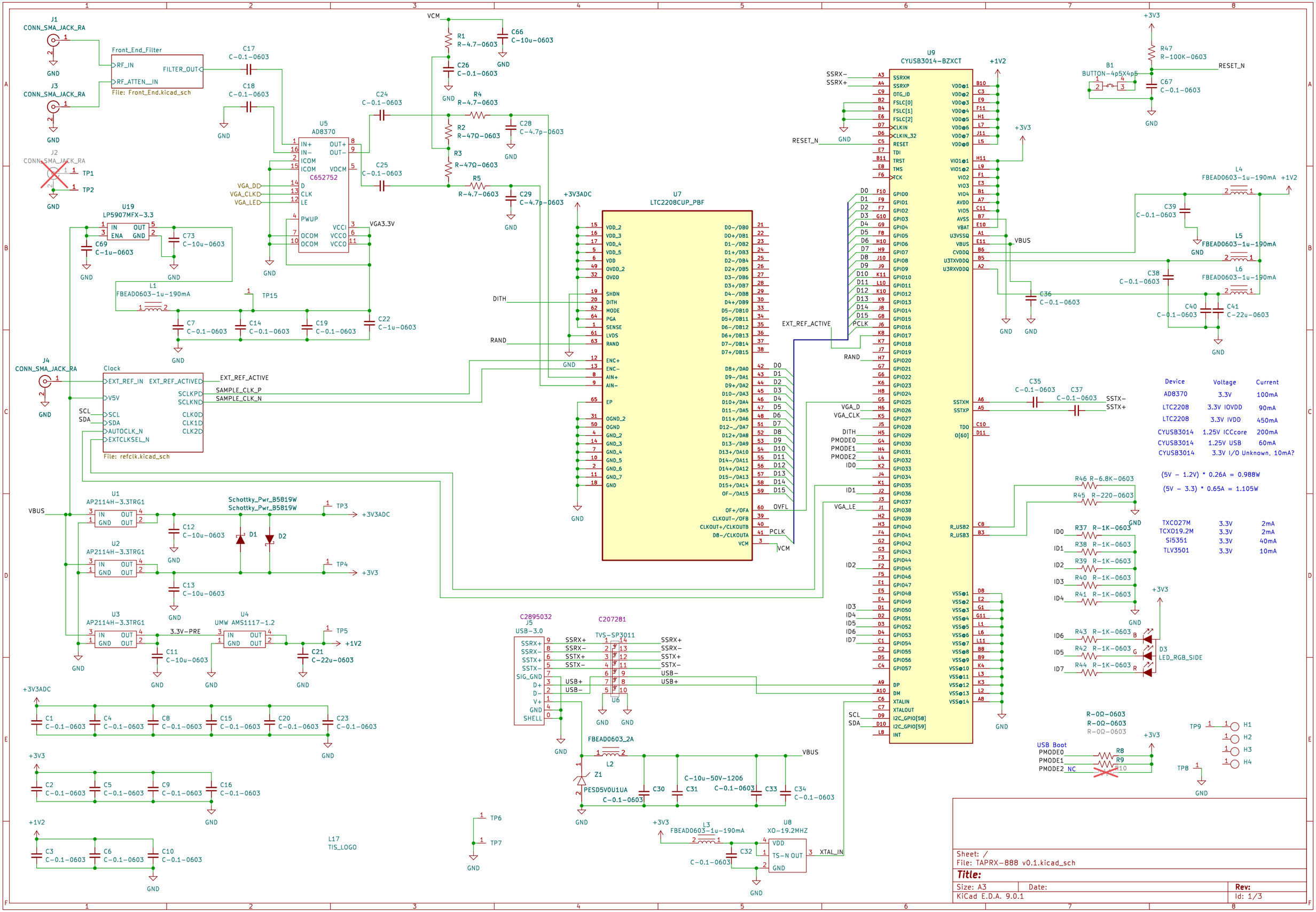
J1
CONN_SMA_JACK_RA
J3
CONN_SMA_JACK_RA
J2
CONN_SMA_JACK_RA
TP1
TP2
Front_End_Filter
RF_IN
RF_ATTEN__IN
FILTER_OUT
File: Front_End.kicad_sch
C17
C-0.1-0603
C18
C-0.1-0603
U5
AD8370
C652752
IN+
IN-
ICOM
ICOM
D
CLK
LE
PWUP
OCOM
OCOM
OUT+
OUT-
VOCM
VCCI
VCCO
VCCO
VGA_DD
VGA_CLK
VGA_LE
VGA3.3V
C24
C-0.1-0603
C25
C-0.1-0603
VCM
R1
R-4.7-0603
C66
C-10u-0603
C26
C-0.1-0603
R4
R-4.7-0603
R2
R-47Ω-0603
R3
R-47Ω-0603
C28
C-4.7p-0603
R5
R-4.7-0603
C29
C-4.7p-0603
U19
LP5907MFX-3.3
IN
OUT
ENA
GND
C69
C-1u-0603
C73
C-10u-0603
L1
FBEAD0603-1u-190mA
TP15
C7
C-0.1-0603
C14
C-0.1-0603
C19
C-0.1-0603
C22
C-1u-0603
+3V3ADC
U7
LTC2208CUP_PBF
VDD_2
VDD_3
VDD_4
VDD_5
VDD
OVDD_2
OVDD
SHDN
DITH
MODE
PGA
SENSE
LVDS
RAND
ENC+
ENC-
AIN+
AIN-
EP
OGND_2
OGND
GND_2
GND_3
GND_4
GND_5
GND_6
GND_7
GND
D0-/DB0
D0+/DB1
D1-/DB2
D1+/DB3
D2-/DB4
D2+/DB5
D3-/DB6
D3+/DB7
D4-/DB8
D4+/DB9
D5-/DB10
D5+/DB11
D6-/DB12
D6+/DB13
D7-/DB14
D7+/DB15
D8+/DA0
D9-/DA1
D9+/DA2
D10-/DA3
D10+/DA4
D11-/DA5
D11+/DA6
D12-_/DA7
D12+/DA8
D13-/DA9
D13+/DA10
D14-/DA11
D14+/DA12
D15-/DA13
D15+/DA14
OF-/DA15
OF+/OFA
CLKOUT-/OFB
CLKOUT+/CLKOUTB
D8-/CLKOUTA
VCM
OVFL
PCLK
J4
CONN_SMA_JACK_RA
Clock
EXT_REF_IN
V5V
SCL
SDA
AUTOCLK_N
EXTCLKSEL_N
EXT_REF_ACTIVED
SCLKPD
SCLKND
CLK0D
CLK1D
CLK2D
File: refclk.kicad_sch
EXT_REF_ACTIVE
SAMPLE_CLK_P
SAMPLE_CLK_N
U1
AP2114H-3.3TRG1
U2
AP2114H-3.3TRG1
U3
AP2114H-3.3TRG1
VBUS
Schottky_Pwr_B5819W
Schottky_Pwr_B5819W
D1
D2
C12
C-10u-0603
C13
C-10u-0603
C11
C-10u-0603
TP3
TP4
TP5
+3V3ADC
+3V3
+1V2
3.3V-PRE
U4
UMW AMS1117-1.2
C21
C-22u-0603
C1
C-0.1-0603
C4
C-0.1-0603
C8
C-0.1-0603
C15
C-0.1-0603
C20
C-0.1-0603
C23
C-0.1-0603
C2
C-0.1-0603
C5
C-0.1-0603
C9
C-0.1-0603
C16
C-0.1-0603
C3
C-0.1-0603
C6
C-0.1-0603
C10
C-0.1-0603
L17
TIS_LOGO
C2895032
J5
USB-3.0
SSRX+
SSRX-
SSTX+
SSTX-
SIG_GND
D+
D-
V+
GND
SHELL
C207281
TVS-SP3011
U6
USB+
USB-
FBEAD0603_2A
L2
Z1
PESD5V0U1UA
C-0.1-0603
C30
C31
C-10u-50V-1206
C-0.1-0603
C33
C34
C-0.1-0603
TP6
TP7
+3V3
L3
FBEAD0603-1u-190mA
C32
C-0.1-0603
U8
XO-19.2MHZ
VDD
TS-N OUT
GND
XTAL_IN
U9
CYUSB3014-BZXCT
SSRXM
SSRXP
OTG_ID
FSLC[0]
FSLC[1]
FSLC[2]
CLKIN
CLKIN_32
RESET
TDI
TRST
TMS
TCK
GPIO0
GPIO1
GPIO2
GPIO3
GPIO4
GPIO5
GPIO6
GPIO7
GPIO8
GPIO9
GPIO10
GPIO11
GPIO12
GPIO13
GPIO14
GPIO15
GPIO16
GPIO17
GPIO18
GPIO19
GPIO20
GPIO21
GPIO22
GPIO23
GPIO24
GPIO25
GPIO26
GPIO27
GPIO28
GPIO29
GPIO30
GPIO31
GPIO32
GPIO33
GPIO34
GPIO35
GPIO36
GPIO37
GPIO38
GPIO39
GPIO40
GPIO41
GPIO42
GPIO43
GPIO44
GPIO45
GPIO46
GPIO47
GPIO48
GPIO49
GPIO50
GPIO51
GPIO52
GPIO53
GPIO54
GPIO55
GPIO56
GPIO57
DP
DM
XTALIN
XTALOUT
I2C_GPIO[58]
I2C_GPIO[59]
INT
VDD@1
VDD@2
VDD@3
VDD@4
VDD@5
VDD@6
VDD@7
VDD@8
VIO1@1
VIO1@2
VIO2
VIO3
VIO4
AVDD
VIO5
AVSS
VBAT
U3VSSQ
VBUS
CVDDQ
U3TXVDDQ
U3RXVDDQ
SSTXM
SSTXP
TDO
O[60]
R_USB2
R_USB3
VSS@1
VSS@2
VSS@3
VSS@4
VSS@5
VSS@6
VSS@7
VSS@8
VSS@9
VSS@10
VSS@11
VSS@12
VSS@13
VSS@14
SSRX-
SSRX+
RESET_N
EXT_REF_ACTIVE
RAND
VGA_D
VGA_CLK
DITH
PMODE0
PMODE1
PMODE2
ID0
ID1
VGA_LE
ID2
ID3
ID4
ID5
ID6
ID7
PCLK
VCM
SCL
SDA
VBUS
C36
C-0.1-0603
C35
C-0.1-0603
C37
C-0.1-0603
SSTX-
SSTX+
+3V3
R47
R-100K-0603
RESET_N
B1
BUTTON-4p5X4p5
C67
C-0.1-0603
L4
FBEAD0603-1u-190mA
+1V2
C39
C-0.1-0603
L5
FBEAD0603-1u-190mA
L6
FBEAD0603-1u-190mA
C38
C-0.1-0603
C40
C-0.1-0603
C41
C-22u-0603
R46 R-6.8K-0603
R45 R-220-0603
R37 R-1K-0603
R38 R-1K-0603
R39 R-1K-0603
R40 R-1K-0603
R41 R-1K-0603
R43 R-1K-0603
R42 R-1K-0603
R44 R-1K-0603
D3
LED_RGB_SIDE
R-0Ω-0603
R-0Ω-0603
R-0Ω-0603
USB Boot
PMODE0
PMODE1
PMODE2
NC
R8
R9
R10
TP9
TP8
H1
H2
H3
H4
Device Voltage Current
AD8370 3.3V 100mA
LTC2208 3.3V IOVDD 90mA
LTC2208 3.3V IVDD 450mA
CYUSB3014 1.25V ICCcore 200mA
CYUSB3014 1.25V USB 60mA
CYUSB3014 3.3V I/O Unknown, 10mA?
(5V - 1.2V) * 0.26A = 0.988W
(5V - 3.3) * 0.65A = 1.105W
TXCO27M 3.3V 2mA
TCXO19.2M 3.3V 2mA
Si5351 3.3V 40mA
TLV3501 3.3V 10mA
Sheet: /
File: TAPRX-888 v0.1.kicad_sch
Title:
Size: A3
Date:
Rev:
KiCad E.D.A. 9.0.1
Id: 1/3

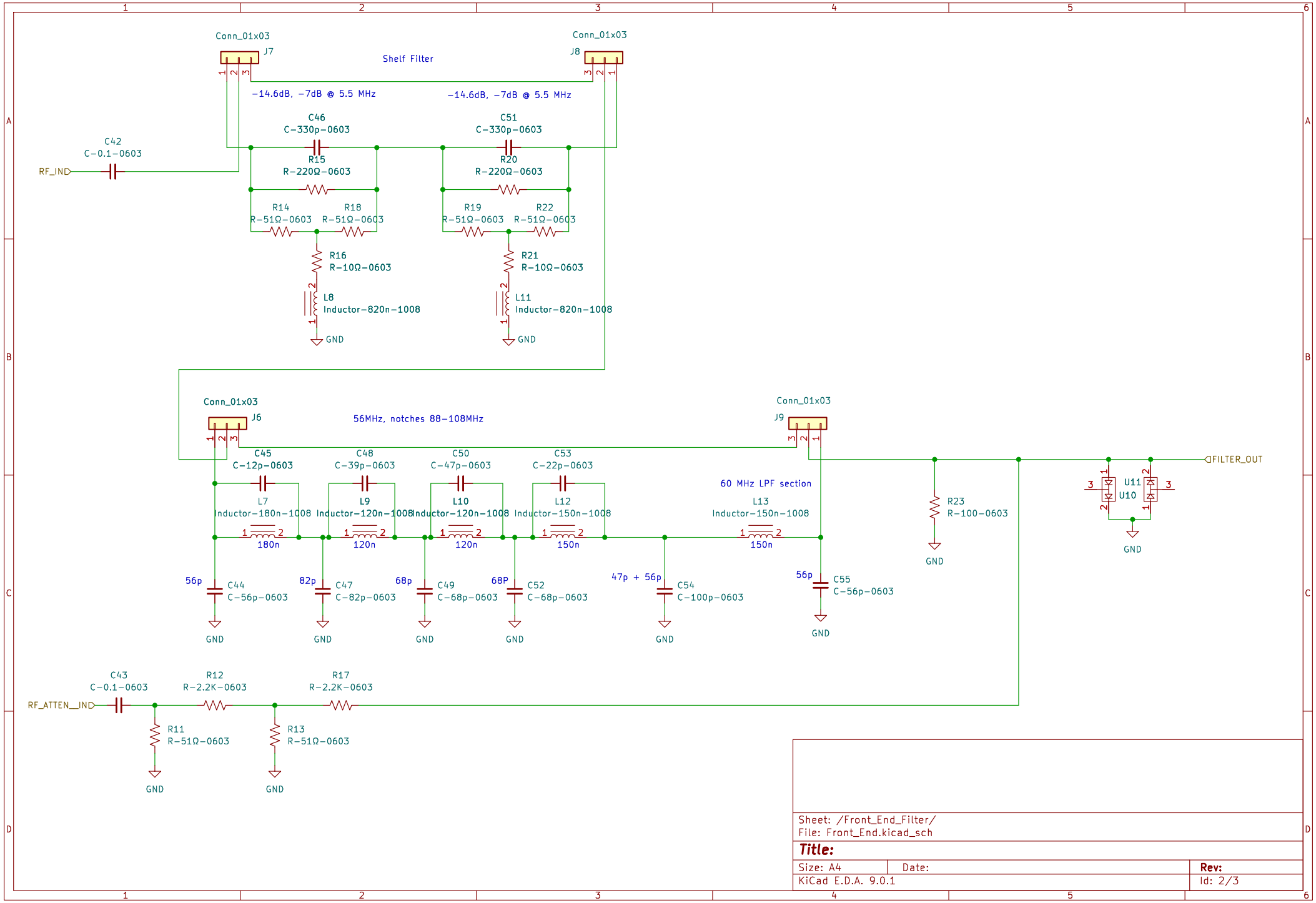

Sheet: /Front_End_Filter/
File: Front_End.kicad_sch

Title:

Size: A4	Date:	Rev:
KiCad E.D.A. 9.0.1		Id: 2/3

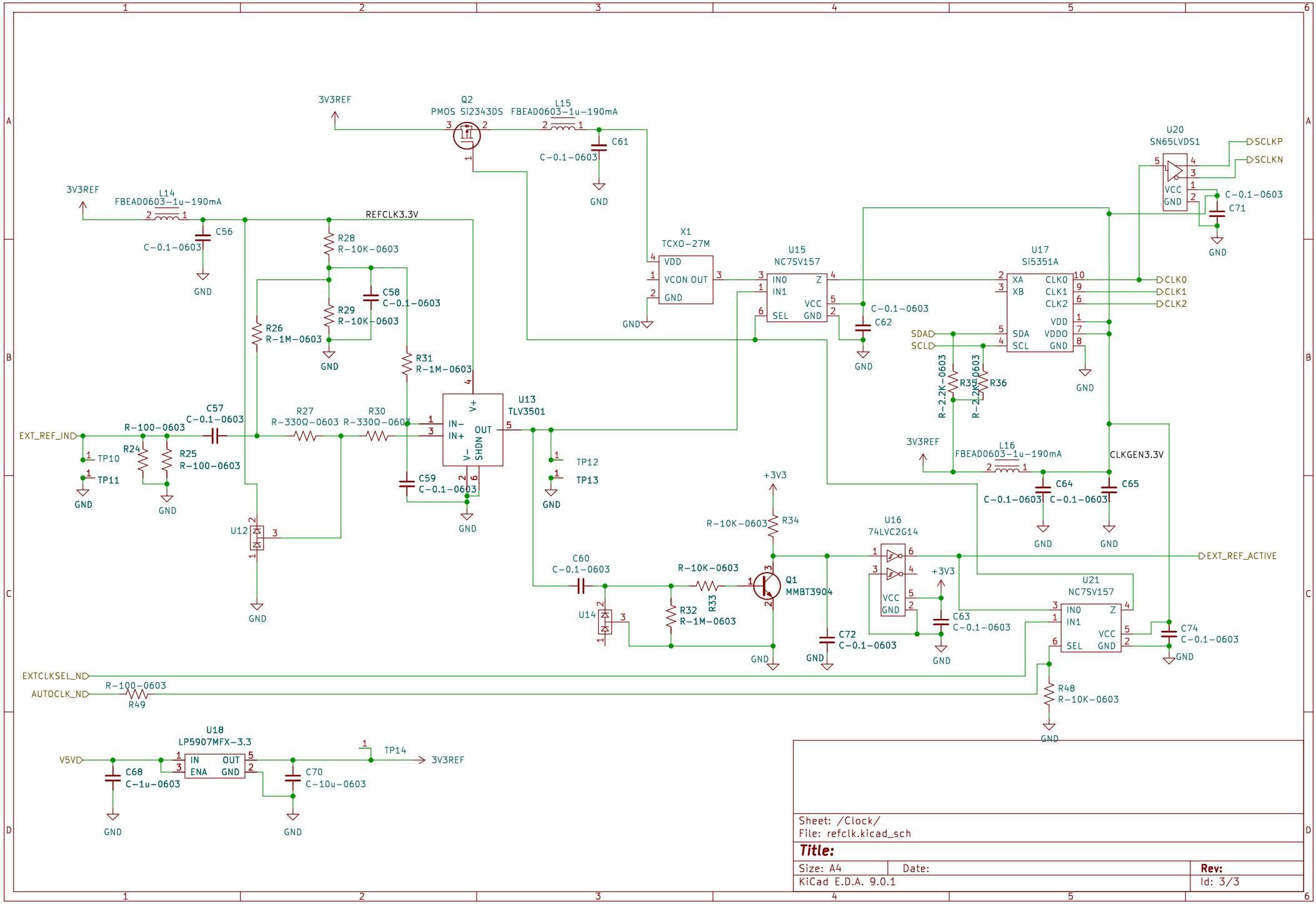

Sheet: /Clock/
File: refclk.kicad_sch

Title:

Size: A4	Date:	Rev:
KiCad E.D.A. 9.0.1		Id: 3/3